CHEETAH

RUGGEDIZED CAMERA SERIES

P67-C2410

CMOS 5 MP

GigE Vision® with Power over Ethernet (PoE)

Imperx: *C2410*

The P67-C2410 provides the same robust camera design as the POE-C2410 with an IP67 enclosure. This camera features the Sony Pregius IMX264 Global Shutter CMOS sensor with a native resolution of 2464 x 2056 in a 2/3" optical format delivering up to 22 frames per second with GigE Vision®, Power over Ethernet (PoE)® output. Imperx puts you in control by providing the user the ability to set the camera up very easily. The Cheetah is designed to provide the optimal image quality for simple imaging applications to the most demanding of applications. Using the simple Gen<i>Cam™ compliant user interface, you can easily apply image corrections to enhance recognition or quality. By combining the powerful Imperx camera control with an IP67 rated housing to protect the camera from dust, water and other contaminants the camera can be utilized in harsh environments.

Specifications

Feature	Description
Output Interface	GigE Vision® with Power over Ethernet (PoE)
Resolution	2464 (H) x 2056 (V)
Sensor	Sony Pregius IMX264 CMOS Color/Mono
Sensor Format	8.5 mm (H) x 7.1 mm (V), 2/3" optical format
Pixel Size	3.45 microns square
Shutter	Global shutter (GS)
Sensor Digitization	12-bit
Frame Rate	22 fps (8-bit), 11 fps (10-bit/12-bit unpacked), 15 fps (10-bit/12-bit packed)
Dynamic Range	71 dB
Output Bit Depth	8, 10, 12-bit
Analog/Digital Gain	Manual, Auto; 0 dB – 48 dB, 480 steps
Digital Gain	1x (0 dB) to 4x (12 dB) with a precision of 0.001x
Black Level Offset	Manual (0 – 255), Auto
White Balance	Manual, Auto, Once, Off
Shutter Speed	1 µs/step, 14 µs to 16.0 s
Exposure Control	Off, Manual, Auto, External
Regions of Interest (ROI)	2 ROI
Trigger Inputs	External, Pulse Generator, Software
Trigger Options	Edge, Pulse width, Trigger filter, Trigger delay, Debounce
Trigger Modes	Free run, Standard, Fast
External Inputs/Outputs	1 IN (OPTO) / 2 OUT (OPTO, TTL)

Feature	Description
Strobe Output	2 strobes, programmable position and duration
Pulse Generator	Yes, programmable
Data Corrections	2 LUTs pre-programmed with Gamma 0.45, 2 LUTs pre-programmed with Negative LUT Bad pixel correction (static, dynamic), Flat field correction
Lens Mount	C-Mount
Supply Voltage Range	12 V DC (6 V – 30 V), 1.5 A inrush @ 12 V PoE (IEEE 802.3af / IEEE 802.3at)
Power Consumption	Typical: 3.24 W @ 12 V; PoE: 4.69 W
Camera Current	Typical: 270 mA @ 12 V
Size - Width/Height/Length	48.5 mm (W) x 42.0 mm (H) x 61 mm (L) (without connectors and a lens tube)
Lens Tube Dimensions	44 mm Lens tube: -Inner diameter 44 mm -Outer diameter 50 mm -Length varies (see IP67 lens tubes spec sheet) 64 mm Lens tube: -Inner diameter 64 mm -Outer diameter 70 mm -Length varies (see IP67 lens tubes spec sheet)
Weight	196 g (without a lens tube)
Vibration, Shock	20G (20 – 200 Hz XYZ) / 100G
Environmental	-30 °C to +75 °C Operating (-40 °C to +85 °C tested), -40 °C to +85 °C Storage
Humidity	10% to 90% non-condensing
MTBF	TBD
Military Standard	MIL-STD-810G
Regulatory	FCC Part 15, CE, RoHS

IMPERX

Industrial Cameras & Imaging Systems

Imperx: *C2410 Applications*

The P67-C2410 incorporates a number of unique features tailored to reduce system complexity, maximize interface bandwidth, and expand the usable operational range.

Aerospace ● Satellites ● Surveillance ● Ball Grid Array ● Printed Circuit Board Inspection ● Motion Analysis ● Broadcast Television ● Telepresence ● Unmanned Aerial Vehicles ● Machine Vision ● Intelligent Traffic Systems ● Aerial Imaging ● Open Road Tolling Systems ● Situational Awareness

Absolute Quantum Efficiency

Color Spectral Response — Sony IMX264

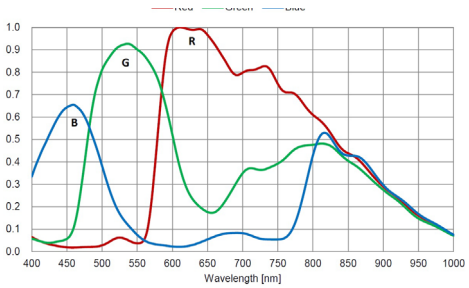

Mono Spectral Response — Sony IMX2640

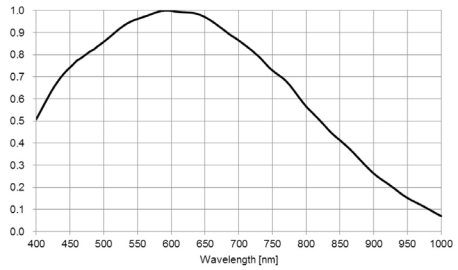

Gen<I>Cam Compliant Camera Configurator

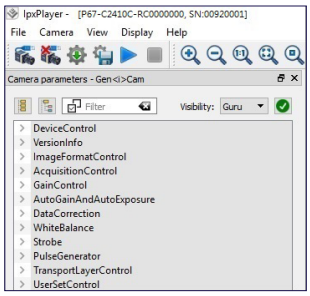

Dimensions

FRONT

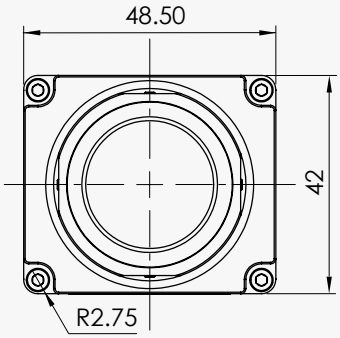

BACK

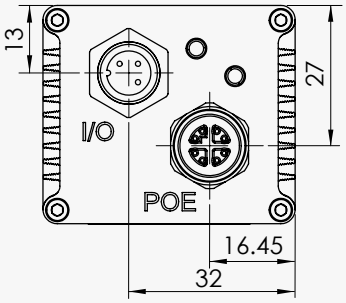

TOP

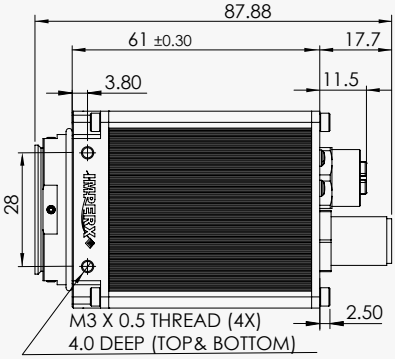

Ordering Information

Please specify the camera model code and select an IP67 lens tube (see IP67 lens tubes spec sheet).

Output Interface
GigE Vision® with Power over Ethernet (PoE)® in IP67 enclosure (P67)
Sensor Types available
Monochrome
Bayer Color
Lens Mounts
C-Mount

Accessories (Sold separately)
CBL-IO08-0001 – Cable, 8 pin I/O, BULGIN CONN to Pigtail, 2 m
CBL-XRJ45-0002 – Cable, RJ45 to 8 position M12/Xcode (IP67 METZ CONN), 2 m
CBL-XRJ45-0003 – Cable, RJ45 to 8 position M12/Xcode (IP67 METZ CONN), 3 m
CBL-XRJ45-0005 – Cable, RJ45 to 8 position M12/Xcode (IP67 METZ CONN), 5 m
CBL-XRJ45-0010 – Cable, RJ45 to 8 position M12/Xcode (IP67 METZ CONN), 10 m
CBL-XRJ45-0015 – Cable, RJ45 to 8 position M12/Xcode (IP67 METZ CONN), 15 m
CBL-XRJ45-0020 – Cable, RJ45 to 8 position M12/Xcode (IP67 METZ CONN), 20 m

Connectors

Power and I/O Interface

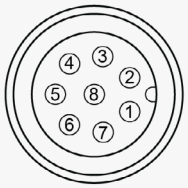

1. Reserved
2. +12 VDC
3. IN1 (OPTO)
4. IN1/OUT1 RETURN
5. OUT2 RETURN
6. OUT1 (OPTO)
7. +12 VDC RETURN
8. OUT2 (TTL)

Connector: BULGIN PXMBNI12RPM08APCM12

1000BASE-T Ethernet Interface

	Cable Wires:
1. TD0+	White/Orange
2. TD0-	Orange
3. TD1+	White/Green
4. TD1-	Green
5. TD3+	White/Brown
6. TD3-	Brown
7. TD2-	White/Blue
8. TD2+	Blue

Connector: MACOM MMT361A315

SAIS Espace BOAT 2 route de Gasville 28630
NOGENT LE PHAYE
Tel : 09 54 16 23 53 Fax : 09 59 16 23 53
contact@sacasa.info - www.sacasa.info
www.imperx-camera.fr

Rev: p67_c2410_r6_2019

Quality Management System ISO 9001:2015 Registered
Environmental Management System ISO 14001:2015 Registered
DDTC Registered (Directorate of Defense Trade Controls, US Department of State)

Technical data has been fully checked, but accuracy of printed matter is not guaranteed. Subject to change without notice. Copyright 2019.